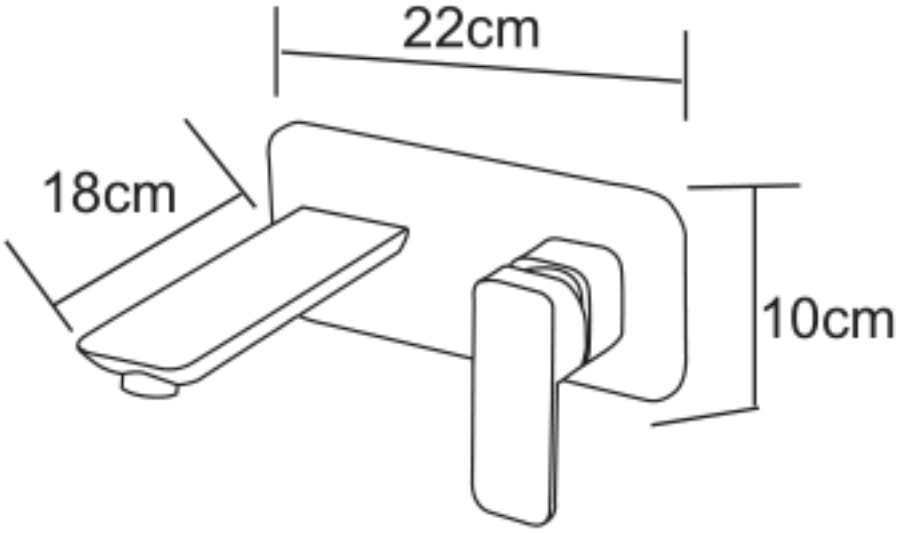
22cm
18cm
10cm

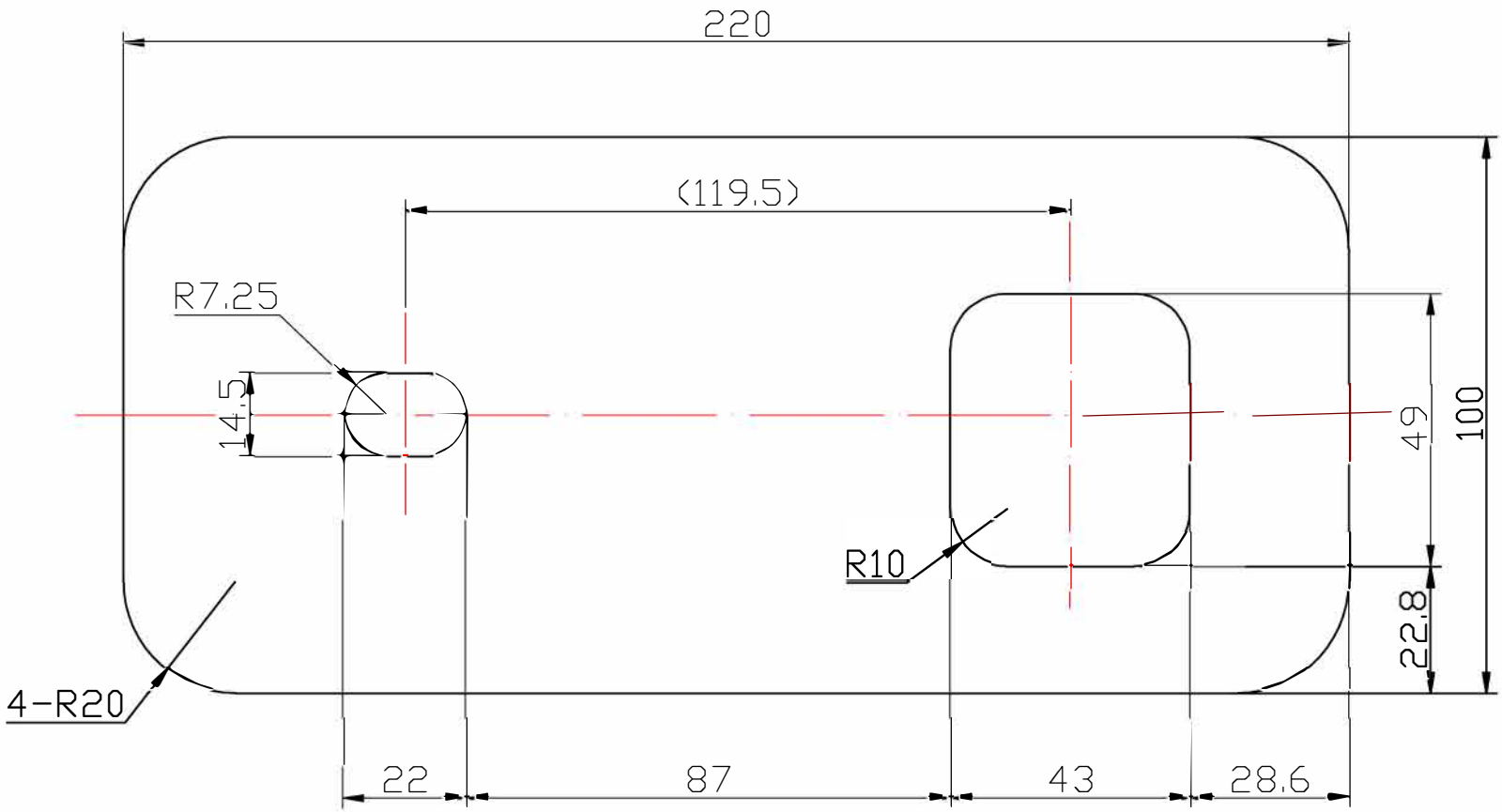
220
(119.5)
R7.25
14.5
49
100
R10
22.8
4-R20
22
87
43
28.6